LAN-55-2E

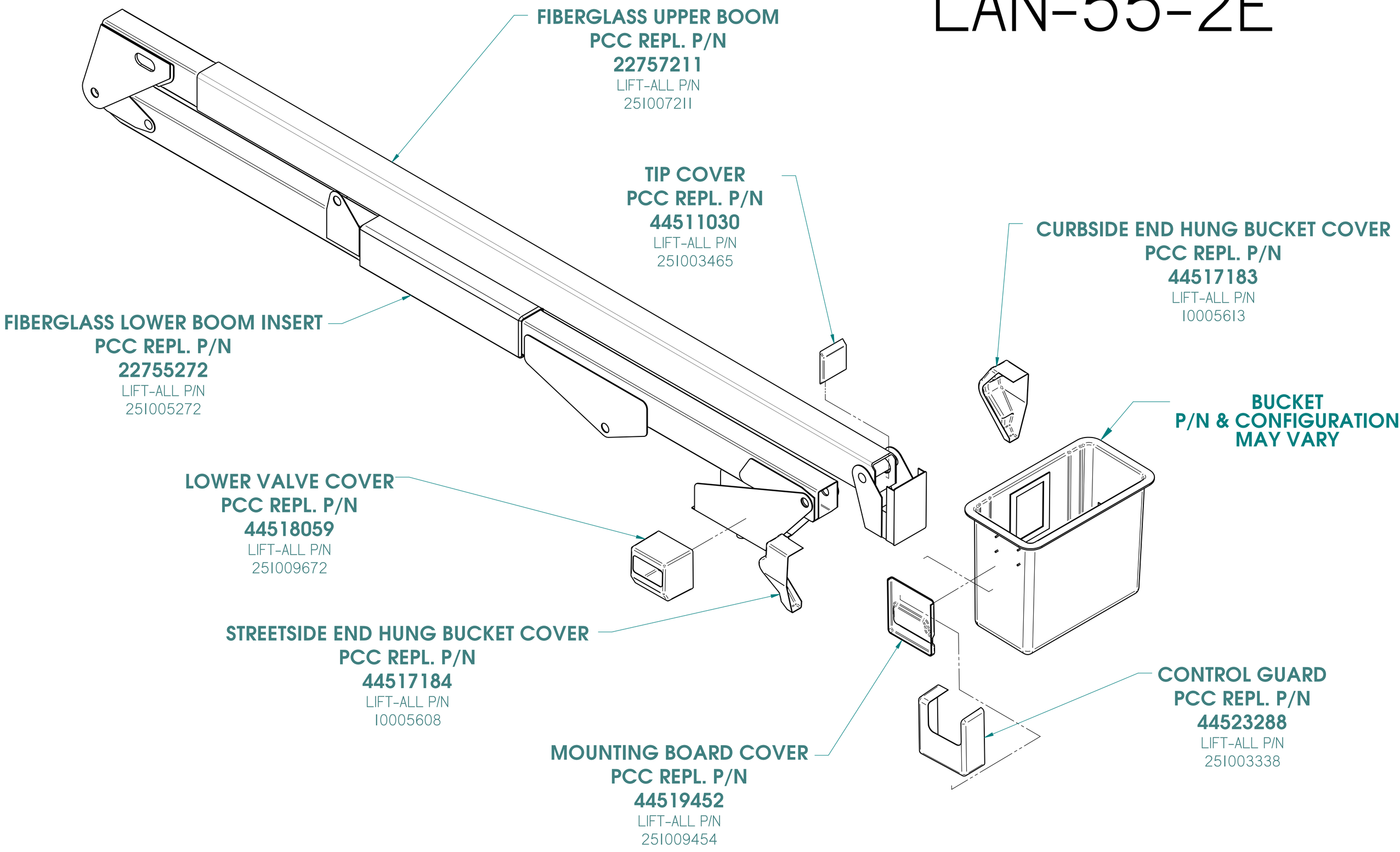
FIBERGLASS UPPER BOOM
PCC REPL. P/N
22757211
LIFT-ALL P/N
251007211
TIP COVER
PCC REPL. P/N
44511030
LIFT-ALL P/N
251003465
CURBSIDE END HUNG BUCKET COVER
PCC REPL. P/N
44517183
LIFT-ALL P/N
10005613
FIBERGLASS LOWER BOOM INSERT
PCC REPL. P/N
22755272
LIFT-ALL P/N
251005272
BUCKET
P/N & CONFIGURATION
MAY VARY
LOWER VALVE COVER
PCC REPL. P/N
44518059
LIFT-ALL P/N
251009672
STREETSIDE END HUNG BUCKET COVER
PCC REPL. P/N
44517184
LIFT-ALL P/N
10005608
CONTROL GUARD
PCC REPL. P/N
44523288
LIFT-ALL P/N
251003338
MOUNTING BOARD COVER
PCC REPL. P/N
44519452
LIFT-ALL P/N
251009454