LM-70-2MS

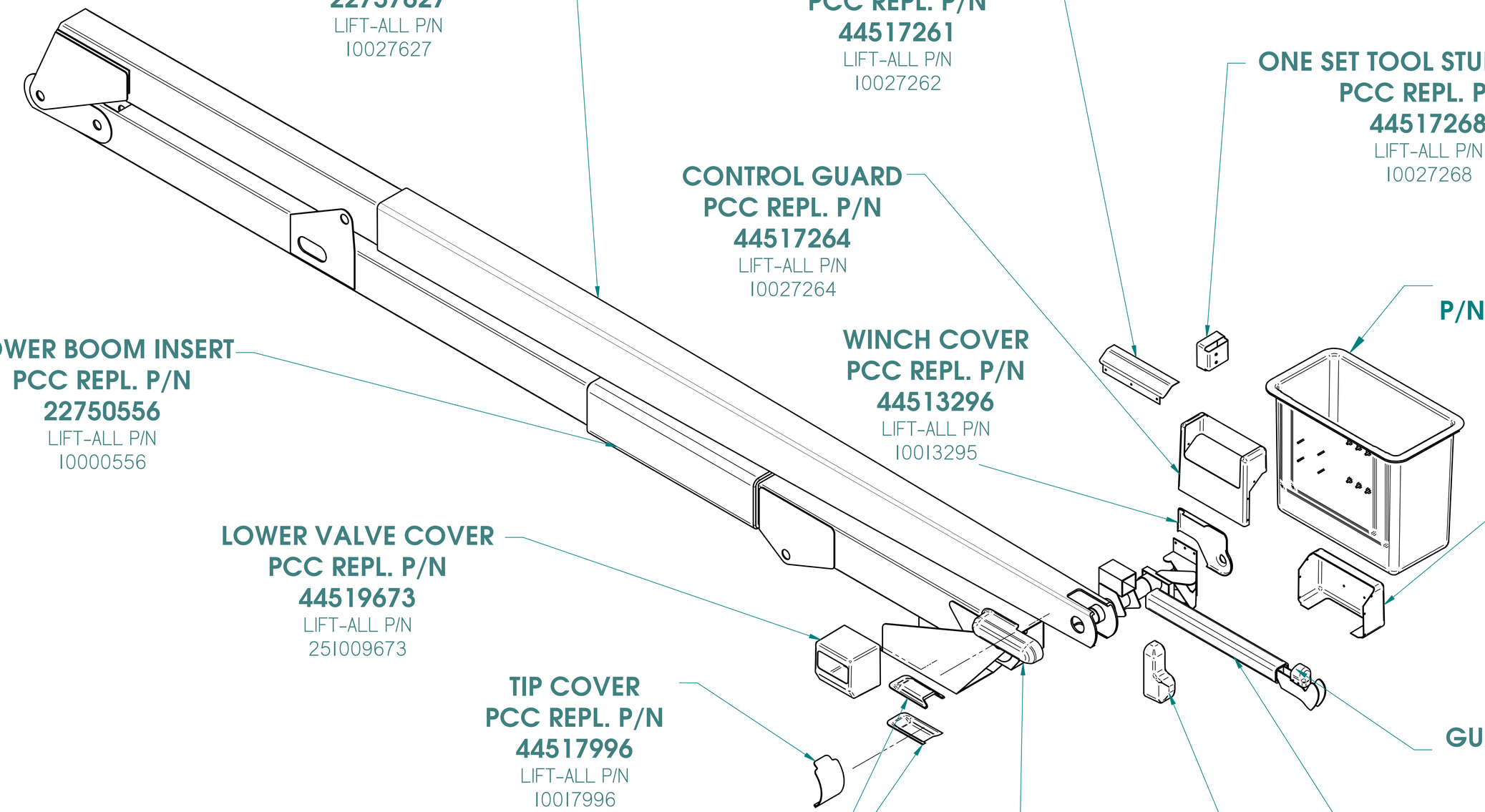

FIBERGLASS UPPER BOOM
PCC REPL. P/N
22757627
LIFT-ALL P/N
10027627

CONTROL SEPARATOR
PCC REPL. P/N
44517261
LIFT-ALL P/N
10027262

ONE SET TOOL STUD COVER
PCC REPL. P/N
44517268
LIFT-ALL P/N
10027268

CONTROL GUARD
PCC REPL. P/N
44517264
LIFT-ALL P/N
10027264

BUCKET
P/N & CONFIGURATION
MAY VARY

LOWER BOOM INSERT
PCC REPL. P/N
22750556
LIFT-ALL P/N
10000556

WINCH COVER
PCC REPL. P/N
44513296
LIFT-ALL P/N
10013295

CONTROL COVER
PCC REPL. P/N
44517265
LIFT-ALL P/N
10027474

LOWER VALVE COVER
PCC REPL. P/N
44519673
LIFT-ALL P/N
251009673

TIP COVER
PCC REPL. P/N
44517996
LIFT-ALL P/N
10017996

GUAGE GUARD COVER
PCC REPL. P/N
44517311
LIFT-ALL P/N
10027311

HOSE COVER
PCC REPL. P/N
44513931
LIFT-ALL P/N
10013932

TIP SPROCKET COVER
PCC REPL. P/N
44517927
LIFT-ALL P/N
10017927

WINCH COVER
PCC REPL. P/N
44512882
LIFT-ALL P/N
10012884

JIB POLE, MANUAL EXTEND
PCC REPL. P/N
22100561-22100564
LIFT-ALL P/N
20000561-20000564